SIEMENS

Data sheet 3RW3017-1BB04



SIRIUS soft starter S00 12.5 A, 5.5 kW/400 V, 40 °C 200-480 V AC, 24 V AC/DC Screw terminals

General technical data		
product brand name		SIRIUS
product designation		Soft starter
product feature		
● integrated bypass contact system		Yes
● thyristors		Yes
product function		
● intrinsic device protection		No
● motor overload protection		No
● evaluation of thermistor motor protection		No
● external reset		No
● adjustable current limitation		No
● inside-delta circuit		No
product component motor brake output		No
insulation voltage rated value	V	600
degree of pollution		3, acc. to IEC 60947-4-2
blocking voltage of the thyristor maximum	V	1 600
reference code according to EN 61346-2		Q
reference code according to DIN 40719 extended according to IEC 204-2 according to IEC 750		G
Power Electronics		
operational current		
● at 40 °C rated value	A	12.5
● at 50 °C rated value	A	12
● at 60 °C rated value	A	11
yielded mechanical performance for 3-phase motors		
● at 230 V		
— at standard circuit at 40 °C rated value	kW	3
● at 400 V		
— at standard circuit at 40 °C rated value	kW	5.5
yielded mechanical performance [hp] for 3-phase AC motor at 200/208 V at standard circuit at 50 °C rated value	hp	3
operating frequency rated value	Hz	50 ... 60
relative negative tolerance of the operating frequency	%	-10
relative positive tolerance of the operating frequency	%	10
operating voltage at standard circuit rated value	V	200 ... 480
relative negative tolerance of the operating voltage at standard circuit	%	-15
relative positive tolerance of the operating voltage at standard circuit	%	10
minimum load [%]	%	10

Subject to change without notice
© Copyright Siemens

continuous operating current [% of Ie] at 40 °C	%	115
power loss [W] at operational current at 40 °C during operation typical	W	2
Control circuit/ Control		
type of voltage of the control supply voltage		AC/DC
control supply voltage frequency 1 rated value	Hz	50
control supply voltage frequency 2 rated value	Hz	60
relative negative tolerance of the control supply voltage frequency	%	-10
relative positive tolerance of the control supply voltage frequency	%	10
control supply voltage 1 at AC		
● at 50 Hz rated value	V	24
● at 60 Hz rated value	V	24
relative negative tolerance of the control supply voltage at AC at 50 Hz	%	-15
relative positive tolerance of the control supply voltage at AC at 50 Hz	%	10
relative negative tolerance of the control supply voltage at AC at 60 Hz	%	-15
relative positive tolerance of the control supply voltage at AC at 60 Hz	%	10
control supply voltage 1 at DC rated value	V	24
relative negative tolerance of the control supply voltage at DC	%	-20
relative positive tolerance of the control supply voltage at DC	%	20
display version for fault signal		red
Mechanical data		
size of engine control device		S00
width	mm	45
height	mm	95
depth	mm	150
fastening method		screw and snap-on mounting
mounting position		With vertical mounting surface +/-10° rotatable, with vertical mounting surface +/- 10° tiltable to the front and back
required spacing with side-by-side mounting		
● upwards	mm	60
● at the side	mm	15
● downwards	mm	40
wire length maximum	m	300
number of poles for main current circuit		3
Connections/ Terminals		
type of electrical connection		
● for main current circuit		screw-type terminals
● for auxiliary and control circuit		screw-type terminals
number of NC contacts for auxiliary contacts		0
number of NO contacts for auxiliary contacts		1
number of CO contacts for auxiliary contacts		0
type of connectable conductor cross-sections for main contacts for box terminal using the front clamping point		
● solid		2x (1 ... 2.5 mm²), 2x (2.5 ... 6 mm²)
● finely stranded with core end processing		2x (1 ... 2.5 mm²), 2x (2.5 ... 6 mm²)
type of connectable conductor cross-sections for AWG cables for main contacts for box terminal		
● using the front clamping point		2x (16 ... 10)
type of connectable conductor cross-sections for auxiliary contacts		
● solid		2x (0.25 ... 2.5 mm²)
● finely stranded with core end processing		2x (0.25 ... 1.5 mm²)
type of connectable conductor cross-sections for AWG cables		
● for auxiliary contacts		2x (20 ... 14)
● for auxiliary contacts finely stranded with core end processing		2x (20 ... 16)

Subject to change without notice
© Copyright Siemens

Ambient conditions		
installation altitude at height above sea level	m	5 000
environmental category		
● during transport according to IEC 60721		2K2, 2C1, 2S1, 2M2 (max. fall height 0.3 m)
● during storage according to IEC 60721		1K6 (only occasional condensation), 1C2 (no salt mist), 1S2 (sand must not get inside the devices), 1M4
● during operation according to IEC 60721		3K6 (no formation of ice, no condensation), 3C3 (no salt mist), 3S2 (sand must not get into the devices), 3M6
ambient temperature		
● during operation	°C	-25 ... +60
● during storage	°C	-40 ... +80
derating temperature	°C	40
protection class IP on the front according to IEC 60529		IP20
touch protection on the front according to IEC 60529		finger-safe, for vertical contact from the front
Environmental footprint		
Environmental Product Declaration(EPD)		Yes
global warming potential [CO2 eq] total	kg	63.9
global warming potential [CO2 eq] during manufacturing	kg	11.1
global warming potential [CO2 eq] during sales	kg	0.109
global warming potential [CO2 eq] during operation	kg	54.3
global warming potential [CO2 eq] after end of life	kg	-1.64
UL/CSA ratings		
yielded mechanical performance [hp] for 3-phase AC motor		
● at 220/230 V		
— at standard circuit at 50 °C rated value	hp	3
● at 460/480 V		
— at standard circuit at 50 °C rated value	hp	7.5
contact rating of auxiliary contacts according to UL		B300 / R300

Approvals Certificates

General Product Approval | **EMV**

EMV | **Test Certificates** | **other** | | **Environment**

KC | Type Test Certificates/Test Report | Confirmation | Miscellaneous

Environment

Environmental Confirmations

Further information

Simulation Tool for Soft Starters (STS)
https://support.industry.siemens.com/cs/ww/en/view/101494917
Information on the packaging
https://support.industry.siemens.com/cs/ww/en/view/109813875
Information- and Downloadcenter (Catalogs, Brochures,…)
https://www.siemens.com/ic10
Industry Mall (Online ordering system)
https://mall.industry.siemens.com/mall/en/en/Catalog/product?mlfb=3RW3017-1BB04
Cax online generator
http://support.automation.siemens.com/WW/CAXorder/default.aspx?lang=en&mlfb=3RW3017-1BB04
Service&Support (Manuals, Certificates, Characteristics, FAQs,...)
https://support.industry.siemens.com/cs/ww/en/ps/3RW3017-1BB04

© Copyright Siemens

Image database (product images, 2D dimension drawings, 3D models, device circuit diagrams, EPLAN macros, ...)
http://www.automation.siemens.com/bilddb/cax_de.aspx?mlfb=3RW3017-1BB04&lang=en

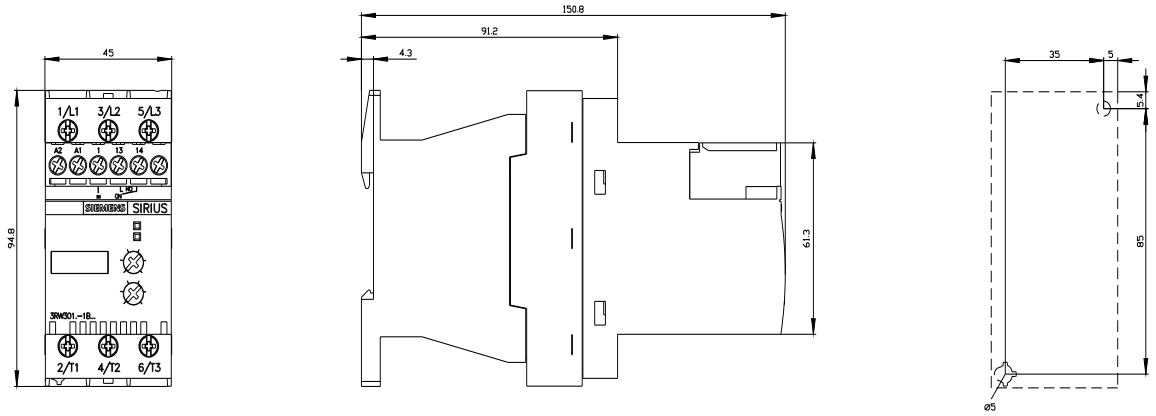

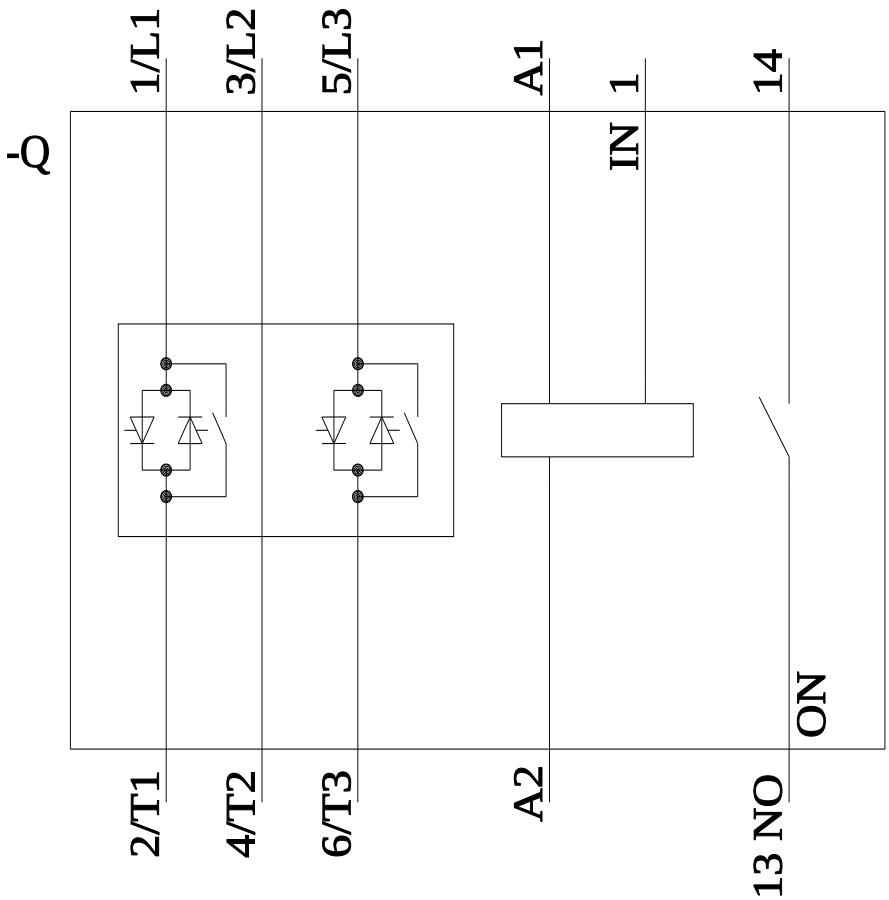

last modified: 5/1/2025

Subject to change without notice
© Copyright Siemens

© Copyright Siemens